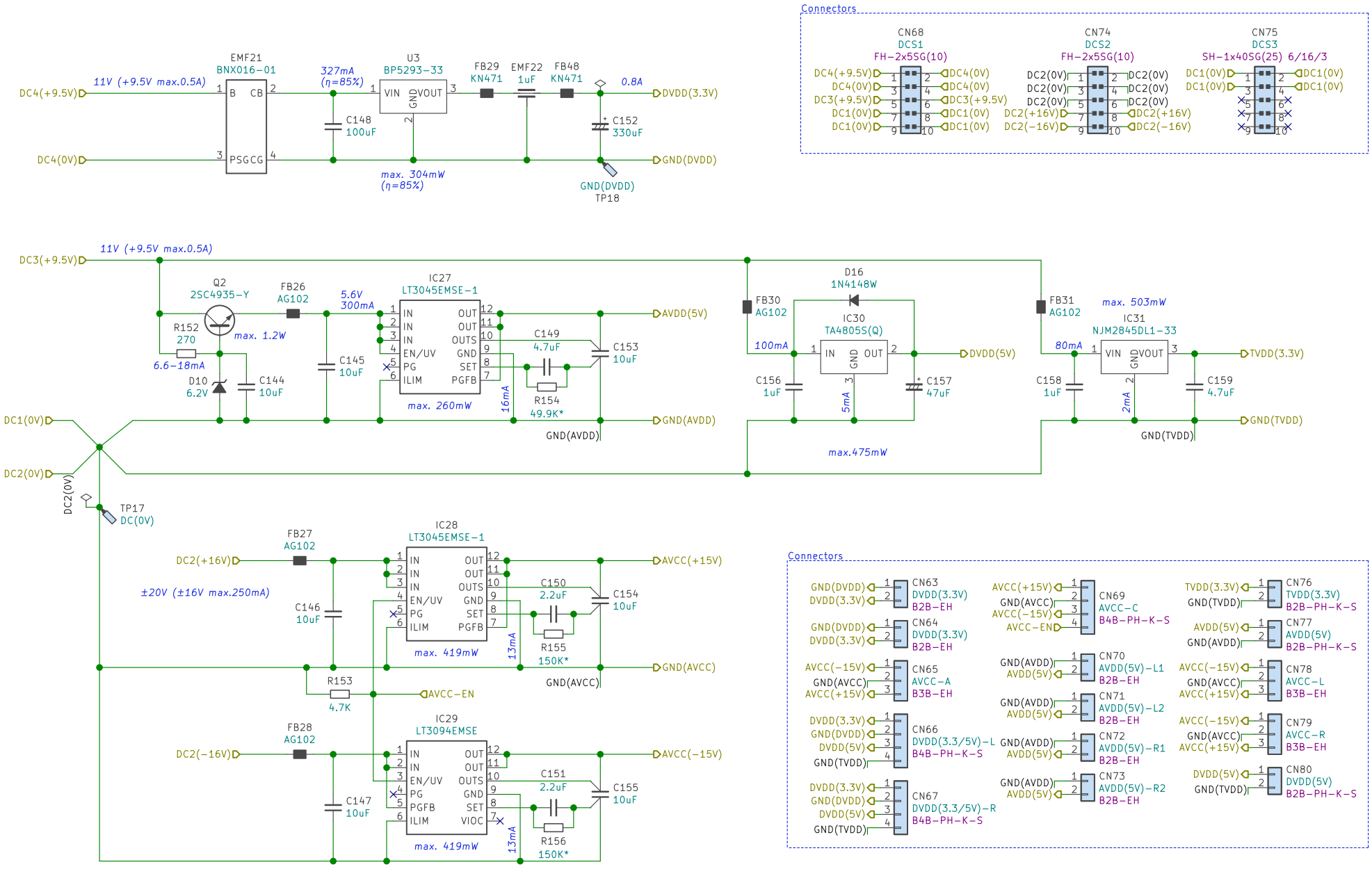

Title: HiResAmp(PowerSection3)		
Denshi Usagi https://xn--p8jqu4215bemxd.com		
Size: A4	Date: 2020-05-18	**Rev: 1.00**
KiCad E.D.A. kicad (5.1.5)-3		Page: 9/18