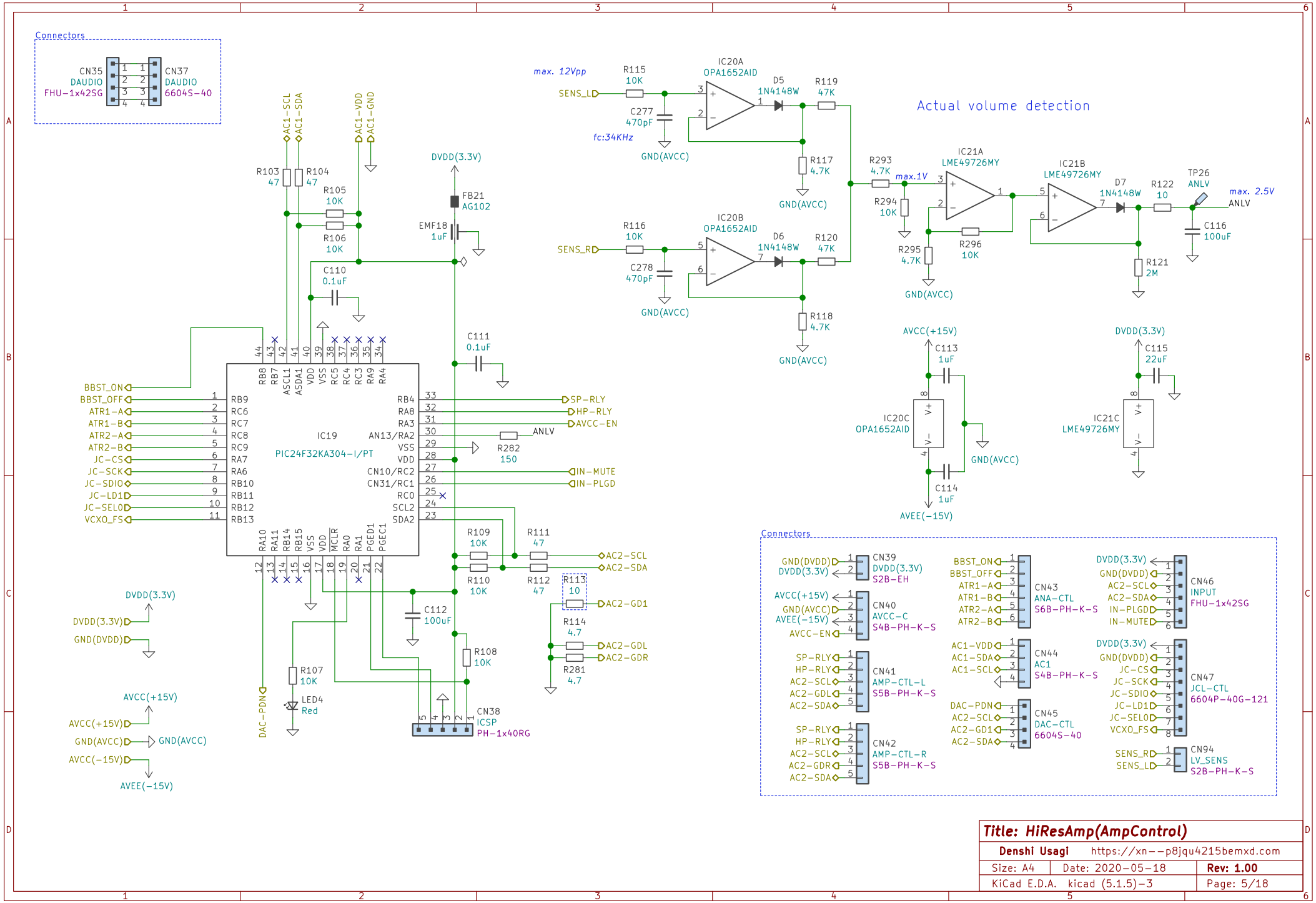
Connectors
CN35
DAUDIO
FHU-1x42SG
CN37
DAUDIO
6604S-40
AC1-SCL
AC1-SDA
AC1-VDD
AC1-GND
R103
47
R104
47
R105
10K
R106
10K
C110
0.1uF
DVDD(3.3V)
FB21
AG102
EMF18
1uF
C111
0.1uF
IC19
PIC24F32KA304-I/PT
BBST_ON
BBST_OFF
ATR1-A
ATR1-B
ATR2-A
ATR2-B
JC-CS
JC-SCK
JC-SDIO
JC-LD1
JC-SEL0
VCXO_FS
SP-RLY
HP-RLY
AVCC-EN
ANLV
R282
150
IN-MUTE
IN-PLGD
R109
10K
R110
10K
R111
47
R112
47
R113
10
AC2-SCL
AC2-SDA
AC2-GD1
R114
4.7
R281
4.7
AC2-GDL
AC2-GDR
C112
100uF
R108
10K
R107
10K
LED4
Red
DAC-PDN
CN38
ICSP
PH-1x40RG
DVDD(3.3V)
DVDD(3.3V)
GND(DVDD)
AVCC(+15V)
AVCC(+15V)
GND(AVCC)
GND(AVCC)
AVCC(-15V)
AVEE(-15V)
max. 12Vpp
SENS_L
R115
10K
C277
470pF
fc:34KHz
GND(AVCC)
IC20A
OPA1652AID
D5
1N4148W
R119
47K
R117
4.7K
GND(AVCC)
SENS_R
R116
10K
C278
470pF
GND(AVCC)
IC20B
OPA1652AID
D6
1N4148W
R120
47K
R118
4.7K
GND(AVCC)
Actual volume detection
R293
4.7K
max.1V
R294
10K
R295
4.7K
GND(AVCC)
IC21A
LME49726MY
R296
10K
IC21B
LME49726MY
D7
1N4148W
R122
10
TP26
ANLV
max. 2.5V
ANLV
C116
100uF
R121
2M
AVCC(+15V)
C113
1uF
IC20C
OPA1652AID
GND(AVCC)
C114
1uF
AVEE(-15V)
DVDD(3.3V)
C115
22uF
IC21C
LME49726MY
Connectors
GND(DVDD)
DVDD(3.3V)
CN39
DVDD(3.3V)
S2B-EH
AVCC(+15V)
GND(AVCC)
AVEE(-15V)
AVCC-EN
CN40
AVCC-C
S4B-PH-K-S
SP-RLY
HP-RLY
AC2-SCL
AC2-GDL
AC2-SDA
CN41
AMP-CTL-L
S5B-PH-K-S
SP-RLY
HP-RLY
AC2-SCL
AC2-GDR
AC2-SDA
CN42
AMP-CTL-R
S5B-PH-K-S
BBST_ON
BBST_OFF
ATR1-A
ATR1-B
ATR2-A
ATR2-B
CN43
ANA-CTL
S6B-PH-K-S
AC1-VDD
AC1-SDA
AC1-SCL
CN44
AC1
S4B-PH-K-S
DAC-PDN
AC2-SCL
AC2-GD1
AC2-SDA
CN45
DAC-CTL
6604S-40
DVDD(3.3V)
GND(DVDD)
AC2-SCL
AC2-SDA
IN-PLGD
IN-MUTE
CN46
INPUT
FHU-1x42SG
DVDD(3.3V)
GND(DVDD)
JC-CS
JC-SCK
JC-SDIO
JC-LD1
JC-SEL0
VCXO_FS
CN47
JCL-CTL
6604P-40G-121
SENS_R
SENS_L
CN94
LV_SENS
S2B-PH-K-S
Title: HiResAmp(AmpControl)
Denshi Usagi
https://xn--p8jqu4215bemxd.com
Size: A4
Date: 2020-05-18
Rev: 1.00
KiCad E.D.A. kicad (5.1.5)-3
Page: 5/18